Sit To Health®
WWW.SITTOHEALTH.COM
2021 Catalogue

About Us

WWW.SITTOHEALTH.COM

SitToHealth was estabished in 2018 .
We design and produce ergonomic chair
made with polyurethane integral skinning foam .
With such material , the chair can be water-proof ,
easy clean ,and the bring you the comfortable sitting feelling .

Piscel Huang
Founder & Designer

SitToHealth

ADD: Xinlong Industrial Park,Longjiang Town ,Foshan ,China

Tel : +86 757023229982 Mobie : +86 13790546005 (Whatsapp&Wechat)

Email: info@sittohealth.com /twlfuture@gmail.com

Wechat Whatsapp

BEAUTIFUL
NATURAL
BACKGROUND
100% ECO STYLE
STH-Cactus
Born To Ergonomic

STH-Cactus®

SitToHealth Series

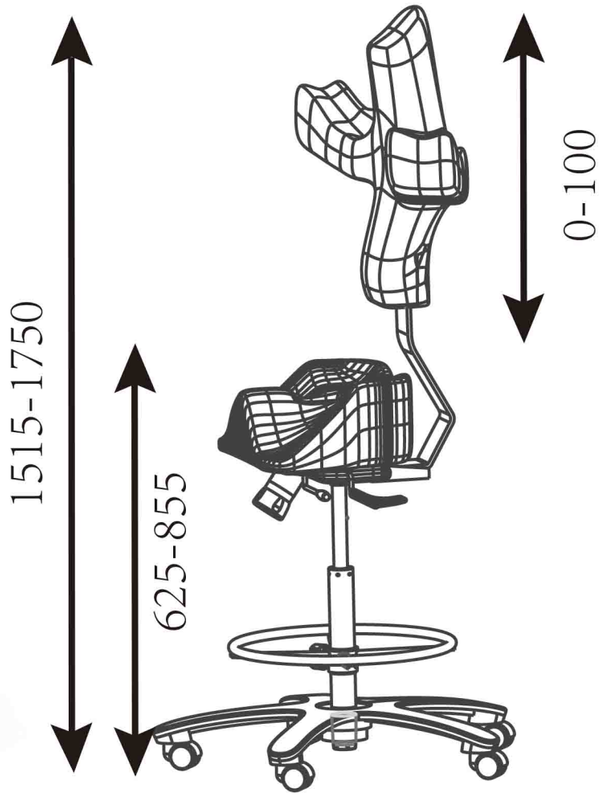

******

Price :

SitToHealth LTD

Add : Xinlong Developing Zone ,Longjiang Town,Shunde District ,Foshan ,China
www.sittohealth.com , whatsapp & Wechat : +86 13790546005 Email : info@sittohealth.com

Parts Menue (配件表)			For STH-Cactus		
No.	Name	Picture	Materials	Size(mm)	Remark
1	Cushion		PU ISF +plywood	330*400*171	
2	Backrest		PU ISF	609*824	
3	Mechanism		Backing-rion	150*200 (screw distance)	
4	Gas Lift		Chromed-rion	#260	
5	Foot-ring	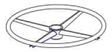	Alunimun cross	Dia 450	
6	Chair-leg		Plastic -PA	Dia 640	
7	Castor		PA	Dia 50	
8	Armrest		PU+PA		Ajustable

Color :

Remark: MOQ 200 pcs for other color except Black

STH-Cactus-A

STH-Cactus-SIT

SitToHealth Series

STH-Cactus-SIT

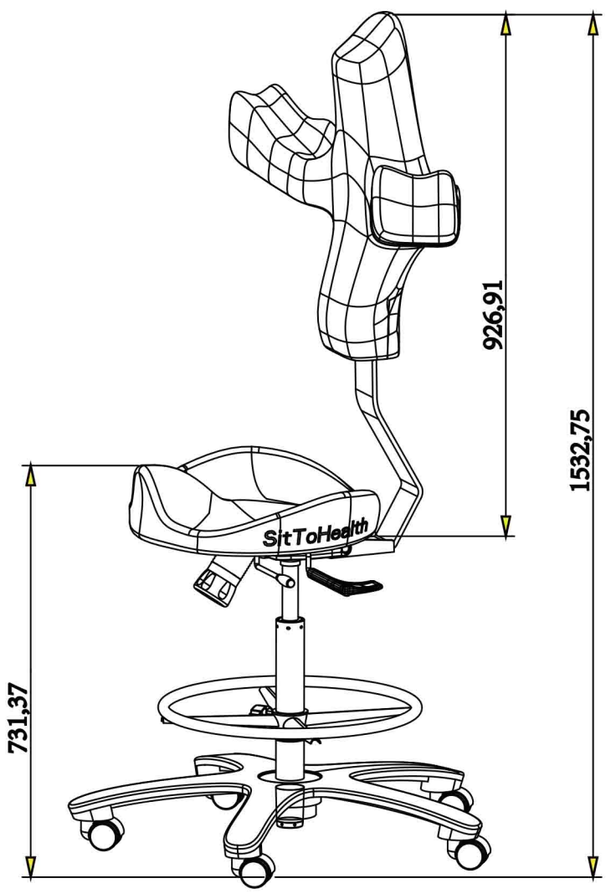

Price :

SitToHealth LTD

Add : Xinlong Developing Zone ,Longjiang Town,Shunde District ,Foshan ,China

www.sittohealth.com , whatsapp & Wechat : +86 13790546005 Email : info@sittohealth.com

Parts Menue (配件表)			For STH-Cactus		
No.	Name	Picture	Materials	Size(mm)	Remark
1	Cushion		PU ISF +plywood	424*421*133	
2	Backrest		PU ISF	609*824	
3	Mechanism		Backing-rion	150*200 (screw distance)	
4	Gas Lift		Chromed-rion	#260	
5	Foot-ring	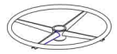	Alunimun cross	Dia 450	
6	Chair-leg		Plastic -PA	Dia 640	
7	Castor		PA	Dia 50	
8	Armrest		PU+PA		Ajustable

Color :

Remark: MOQ 200 pcs for other color except Black

STH-Cactus-SIT-A

Sit To Health®

WWW.SITTOHEALTH.COM

Model : SIT-AFBC

The spine -shape ergo backrest support your back perfectly

Trigger Point for massage

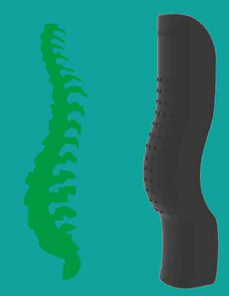

The Saddle-Shape cushion keep you the correct sitting posture

Where to be Used ?

School Office Cleanroom

SitToHealth®

SitToHealth Series

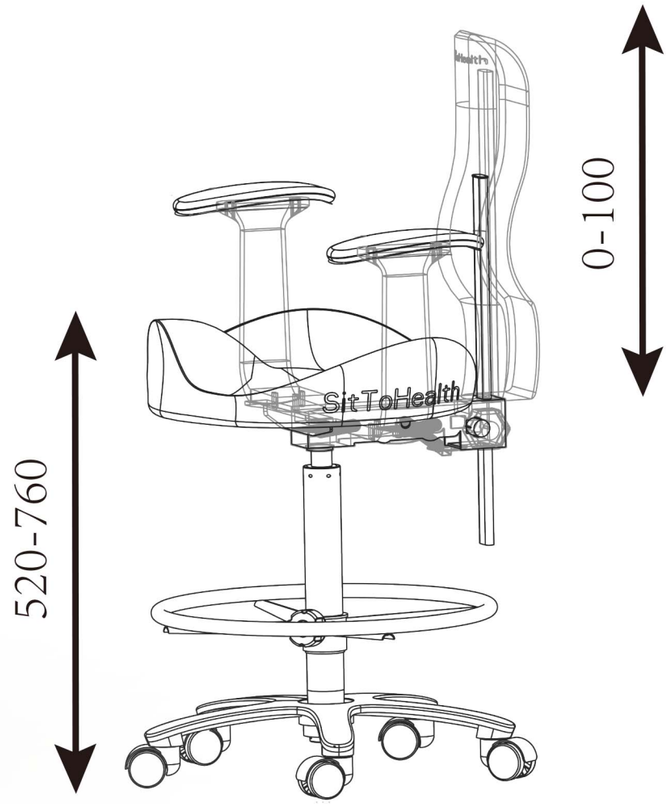

Model : SIT-AFBC

******

Price :

SitToHealth LTD

Add : Xinlong Developing Zone ,Longjiang Town,Shunde District ,Foshan ,China
www.sittohealth.com , whatsapp & Wechat : +86 13790546005 Email : info@sittohealth.com

Parts Menue (配件表)			For SIT-AFBC		
No.	Name	Picture	Materials	Size (mm)	Remark
1	Cushion		PU ISF	424*421*133	
2	Backrest		PU ISF	100*100*495	
3	Mechanism		Backing-rion	214*30 screw distance	
4	Gas Lift		Chromed-rion	#260	
5	Foot-ring	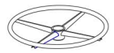	Aluminum Cross	Dia 450	
6	Chair-leg		Plastic-PA	Dia 640	
7	Castor		PA	Dia 50	
8	Arm Pad		PU		
9	Armrest		PA		

Color :

Remark: MOQ 200 pcs for other color except Black

Ergonomic Office Chair
Sit To Health®
WWW.SITTOHEALTH.COM
Model : STH-Cactus-EA

SitToHealth Series

STH-Cactus-E

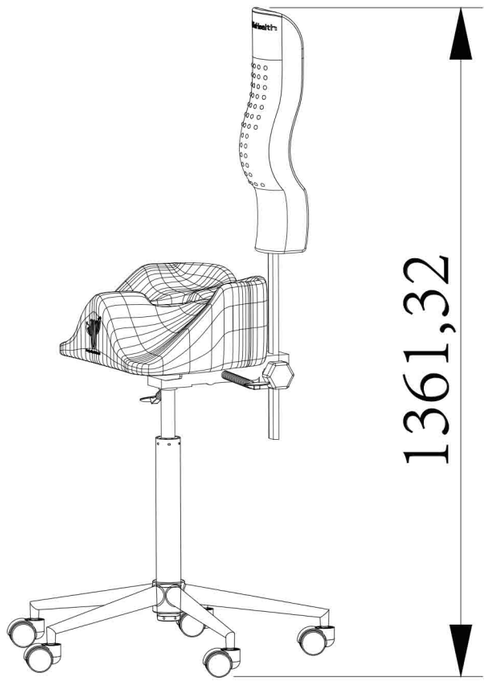

******

Price :

SitToHealth LTD

Add : Xinlong Developing Zone ,Longjiang Town,Shunde District ,Foshan ,China
www.sittohealth.com , whatsapp & Wechat : +86 13790546005 Email : info@sittohealth.com

Parts Menue (配件表)			For STH-Cactus		
No.	Name	Picture	Materials	Size(mm)	Remark
1	Cushion		PU ISF +plywood	330*400*171	
2	Backrest		PU ISF	100*100*495	
3	Mechanism		Backing-rion	150*200 (screw distance)	
4	Gas Lift		Chromed-rion	#260	
5	Foot-ring	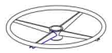	Alunimun cross	Dia 450	
6	Chair-leg		Plastic -PA	Dia 640	
7	Castor		PA	Dia 50	
8	Armrest		PU+PA		Ajustable

Color :

Remark: MOQ 200 pcs for other color except Black

STH-Cactus-EA

Sit To Health®
STH-S-AFBC

SitToHealth Series

STH-S-BFC

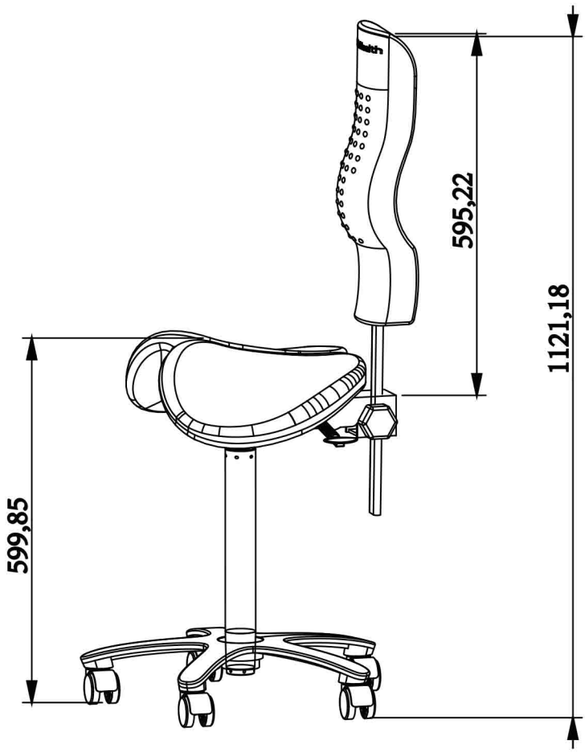

Price :

SitToHealth LTD

Add : Xinlong Developing Zone ,Longjiang Town,Shunde District ,Foshan ,China
www.sittohealth.com , whatsapp & Wechat : +86 13790546005 Email : info@sittohealth.com

Parts Menue (配件表)			For STH-Cactus		
No.	Name	Picture	Materials	Size	Remark
1	Cushion		PU ISF +plywood	360*0	
2	Backrest		PU ISF	100*100*495	
3	Mechanism		Backing-rion	214*30 screw distance	
4	Gas Lift		Chromed-rion	#260	
5	Foot-ring	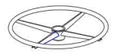	Alunimun cross	Dia 450	
6	Chair-leg		Plastic -PA	Dia640	
7	Castor		PA	Dia50	
8	Armrest		PU+PA		Ajustable

Color :

Remark: MOQ 200 pcs for other color except Black

STH-S-ABFC

Sit To Health®
STH-Yoga-S

Sit To Health®

SitToHealth Series

STH-Yoga

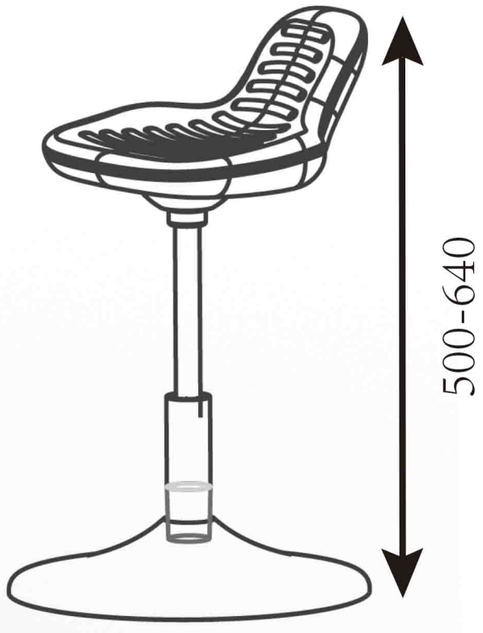

Price : ******

SitToHealth LTD

Add : Xinlong Developing Zone ,Longjiang Town,Shunde District ,Foshan ,China

www.sittohealth.com , whatsapp & Wechat : +86 13790546005 Email : info@sittohealth.com

Parts Menue (配件表)			For STH-Cactus		
No.	Name	Picture	Materials	Size(mm)	Remark
1	Cushion		PU ISF	386*377*129	
2	Backrest				
3	Mechanism		Backing-rion	100*100 screw distance	
4	Gas Lift		Chromed-rion	#140	
5	Foot-ring		Baking Finish	Dia 400	
6	Chair-leg				
7	Castor				
8	Arm Pad				
9	Armrest				

Color :

Remark: MOQ 200 pcs for other color except Black

STH-Yoga-S

Sit To Health®
What will be the next ? 2021